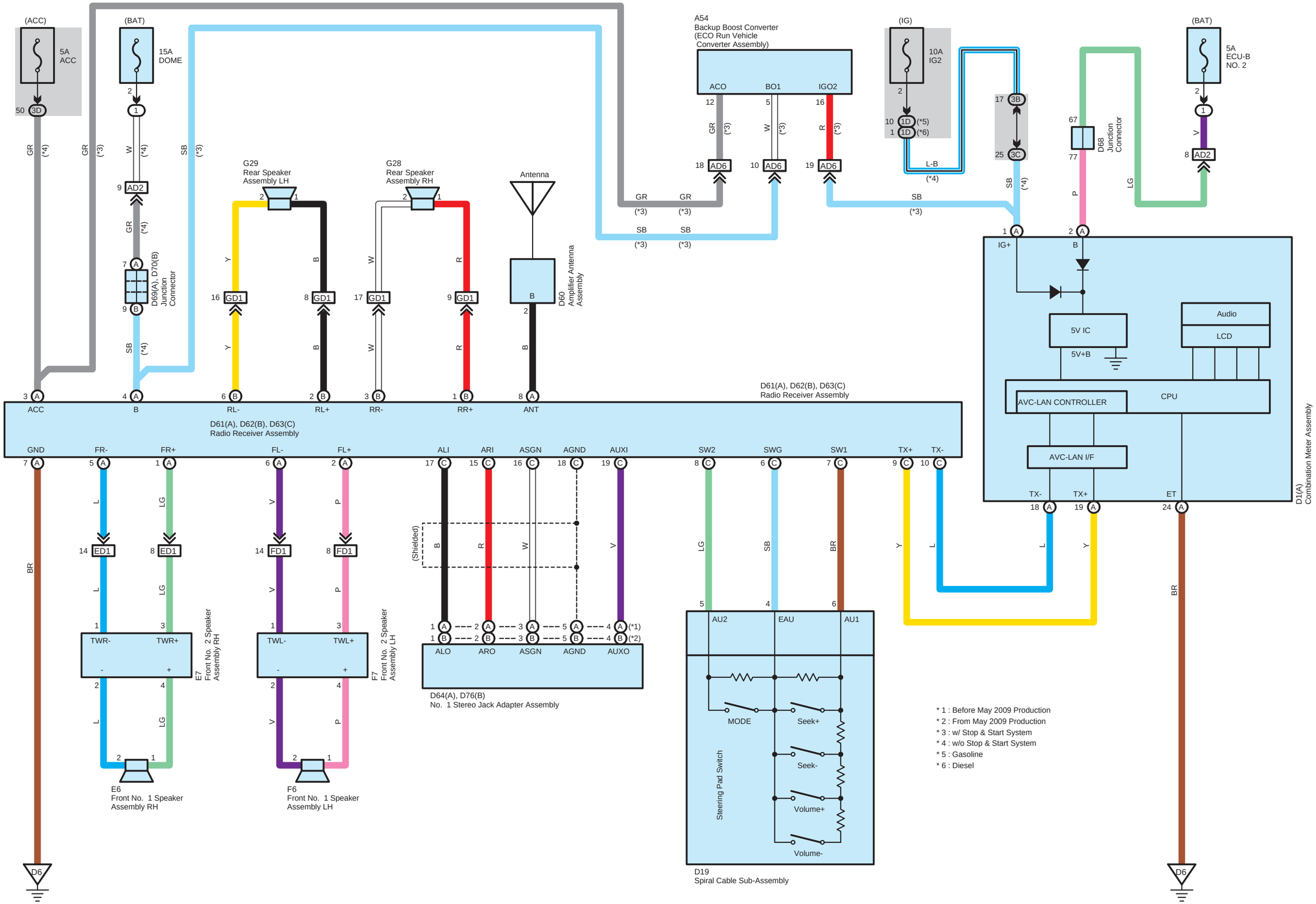
(ACC)
5A
ACC
(BAT)
15A
DOME
A54
Backup Boost Converter
(ECO Run Vehicle
Converter Assembly)
ACO
BO1
IGO2
(IG)
10A
IG2
(BAT)
5A
ECU-B
NO. 2
D68
Junction
Connector
D69(A), D70(B)
Junction
Connector
G29
Rear Speaker
Assembly LH
G28
Rear Speaker
Assembly RH
Antenna
D60
Amplifier Antenna
Assembly
D61(A), D62(B), D63(C)
Radio Receiver Assembly
ACC
B
RL-
RL+
RR-
RR+
ANT
GND
FR-
FR+
FL-
FL+
ALI
ARI
ASGN
AGND
AUXI
SW2
SWG
SW1
TX+
TX-
IG+
5V IC
5V+B
Audio
LCD
CPU
AVC-LAN CONTROLLER
AVC-LAN I/F
ET
D1(A)
Combination Meter Assembly
TWR-
TWR+
E7
Front No. 2 Speaker
Assembly RH
TWL-
TWL+
F7
Front No. 2 Speaker
Assembly LH
E6
Front No. 1 Speaker
Assembly RH
F6
Front No. 1 Speaker
Assembly LH
(Shielded)
ALO
ARO
ASGN
AGND
AUXO
D64(A), D76(B)
No. 1 Stereo Jack Adapter Assembly
AU2
EAU
AU1
MODE
Seek+
Seek-
Volume+
Volume-
Steering Pad Switch
D19
Spiral Cable Sub-Assembly
D6
* 1 : Before May 2009 Production
* 2 : From May 2009 Production
* 3 : w/ Stop & Start System
* 4 : w/o Stop & Start System
* 5 : Gasoline
* 6 : Diesel